VISIONAIRE LIGHTING

PREMIER Collection

Check Out What's New!

At Visionaire Lighting we are always looking to advance and engineer the latest in LED technology and lighting. In our efforts of advancement we have taken our highly rated Premier II LED luminaire and revamped it. Now with more optics, better thermal management, advanced LED technology, easy mounting, maintenance and great energy efficiency. Plus a separate driver compartment allows for our longest LED life yet.

The Premier Collection is now available in a family of fixtures to help create a complete, modern, unified look for any site. The collection comes complete with 2 area light sizes in: post-top and arm mount, wall mounting capabilities and a bollard.

Quality Through & Through!

The Premier Collection offers contemporary architectural design and meets the new generation of LED technology. It is the perfect complement to any university campus, business park, or walkway project where performance and esthetics are required.

The Premier Collection is built to last with cast aluminum housings; hinged, spun aluminum top; and extruded aluminum arms.

The Premier Collection provides over fifty percent energy savings over traditional light sources, and reduces maintenance costs by years and years. Life expectancy of the LEDs is upwards of 20 years!

A variety of optical distributions are available for unlimited design applications. For more information contact us at, ***www.visionairelighting.com***

12.07.18

VISIONAIRE LIGHTING

PRE-2-L ARRAY LEDSpecifications

Project Name:

Catalog Number:

Type:

Contemporary design meets the new generation of LED green technology in this stunning lumenaire, the PRE-2-L Array. The Premier II Array series provides over fifty percent energy savings over traditional HID light sources; and offers excellent beam control and LED life beyond 100,000 hours for 350 milliamp systems. The PRE-2-L Array is offered in six optical distributions.

The PRE-2-L Arrays fully-sealed housing features an exceptionally well-designed thermal management system that provides superior heat dissipation.

The PRE-2-L Array fixture is built with a cast aluminum housing, extruded aluminum arms and a spun aluminum, removable top.

The popular PRE-2-L Array is the perfect compliment to any university campus, business park, or walkway project where contemporary, architectural design is desired.

Ordering Information

MODEL	OPTICS	LUMENS	KELVIN	VOLTAGE	MOUNTING	FINISH	OPTIONS	OPTIONS
PRE-2-L	**T1** Type 1 **T2** Type 2 **T3** Type 3 **T3L** Type 3 Long **T4** Type 4 **T4L** Type 4 Long **T4A** Type 4 Automotive **T5SR** Type 5 Short Round **T5LR** Type 5 Long Round **T5LS** Type Long Square	**6L** **10L** **13L** **16L** **18L** **20L** **22L**	**3K** 3000K **4K** 4000K **5K** 5000K	**UNV** *120-277V **8** 347V **5** 480V	**PT** Post Top *Slips over 4" OD tenon X 4.5" tall as standard	**BZ** Bronze **BK** Black **SBK** Smooth Black **WH** White **SWH** Smooth White **GP** Graphite **GY** Grey **SL** Silver Metallic **CC** Custom Color	**PC-120** Button Type Photocell **PC-208** Button Type Photocell **PC-240** Button Type Photocell **PC-277** Button Type Photocell **PCR-120** Photocell & Receptacle **PCR-208** Photocell & Receptacle **PCR-240** Photocell & Receptacle **PCR-277** Photocell & Receptacle **PCR-480** Photocell & Receptacle **PER** 3 Pin Photo Receptacle w/shorting cap **5PINPER** 5 Pin Photo Receptacle w/shorting cap Requires Dimming Driver **7PINPER** 7 Pin Photo Receptacle w/shorting cap Requires Dimming Driver **WSC-8** Motion Sensor 8' Mounting Height **WSC-20** Motion Sensor 9-20' Mounting Height **WSC-40** Motion Sensor 21-40' Mounting Height This option will require (1) FSIR 100 remote for programing **DIM** 0-10v Dimming Driver **VWC** Visionaire Wireless Controls *Consult Factory	**IR-R** Illuminated Ring Red **IR-B** Illuminated Ring Blue **IR-G** Illuminated Ring Green **IR-GL** Illuminated Ring Gold **IR-W** Illuminated Ring White

Features & Specifications

PRE-2-L ARRAY

Housing
The PRE-2-L' Arrays housing is constructed from durable, corrosion-resistant, cast aluminum. The spun aluminum top cap is .080 gauge, and easily removable for service. Silicone gasketing is provided for complete weather and insect protection.

Thermal Management
• The PRE-2-L Array provides excellent overall thermal management by maximizing the efficiency of the heat sink in the fixture. This enables the Premier II to withstand higher ambient temperatures and higher drive currents without degrading LED life.

Optical System
The hightest lumen output LEDs are utilized. High-performance acrylic optics feature industry leading Type I, II, III, IV, and V optical distributions. Acrylic optics are impact-resistant and rated to 94 percent translucence.
L70 life of our LEDs is rated over 100,000 hours (for 350 mA), The optical system qualifies as IES full cutoff to restrict light trespass, glare and light pollution for neighborhood-friendly lighting.
Serenity Lens – A visually comfortable lens that reduces the glare of LED Arrays.
CRI values are 70.

New LED Array Technology
• 4 Diodes now replace a single Led chip and operate at 25% of the drive current allowing for higher efficiency, less heat and longer life. (10 Year Warranty)
• More LEDs at a lower drive current provides a more comfortable visual effect.

Quali-Guard® Finish
Fixture components are chemically pretreated through a multiple-stage washer, and finished with an electrostatically-applied, thermoset polyester powder coat textured paint with a 3 to 5 mils thickness. Finish is oven-baked at 400 ºF for maximum adherence and finish hardness.
Available in standard and custom colors.
Finish is guaranteed for five (5) years.

Post Top Mount
• The PRE-2-L Arrays contractor-friendly mounting hardware slips over 3" or 4" O.D. x 4" tall tenon utilizing stainless steel hardware.
• Round Internal Tenon Adaptors (RITA) are recommended for a smooth-looking connection. Standard for 4" poles, custom size required for 3" or 5" poles.

Electrical Assembly
• The PRE-2-L Array is supplied with a high-performance driver available in 350, 530, 700 and 1050 mA. The driver is integrally-located in the housing, and is operational from 120 V through 480 V, 50 Hz to 60 Hz input. Power factor is 90%. • Rated for -40o to 50°C operation.
• 10 kV surge protector supplied as standard.

Warranty
• Ten (10) year Limited Warranty on electrical components, Five (5) year on finish. For full warranty information, please visit visionairelighting.com.

Options
• Button type photocell
• 0-10v Dimming Driver
• WattStopper FSP-211
• Motion Sensor
• Wireless Control
• Illuminated Ring

Please consult factory for detailed custom options.

Listings
• PRE-2-L is cUL listed
• DLC Listed
• IDA Certification
• IP65 Rated
• LM79 and LM80
• Powder Coated ToughTM

DesignLights Consortium (DLC) qualified Product. Some configurations of this product family may not be DesignLights Consortium (DLC) listed, please refer to the DLC qualified products list to confirm listed configurations. http://www.designlights.org/
3000K must be selected for IDA certification.

19645 Rancho Way • Rancho Dominguez, CA 900220 • Phone: 310 512 6480 Fax 310 512 6486
www.visionairelighting.com

PRE-2-L ARRAY LEDSpecifications

Photometric Optical Summary

Not all optics are available on all fixtures. Check ordering chart for availability

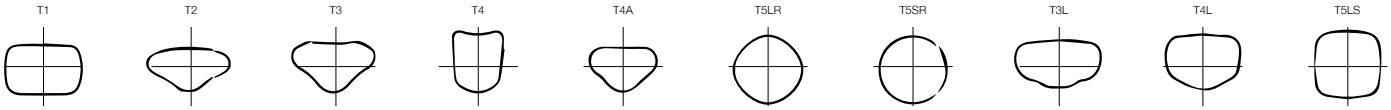

EPA Data

1.2

Dimensions

Width:	PRE-2-L 27”
Height:	PRE-2-L 19”
Weight:	56 LBS

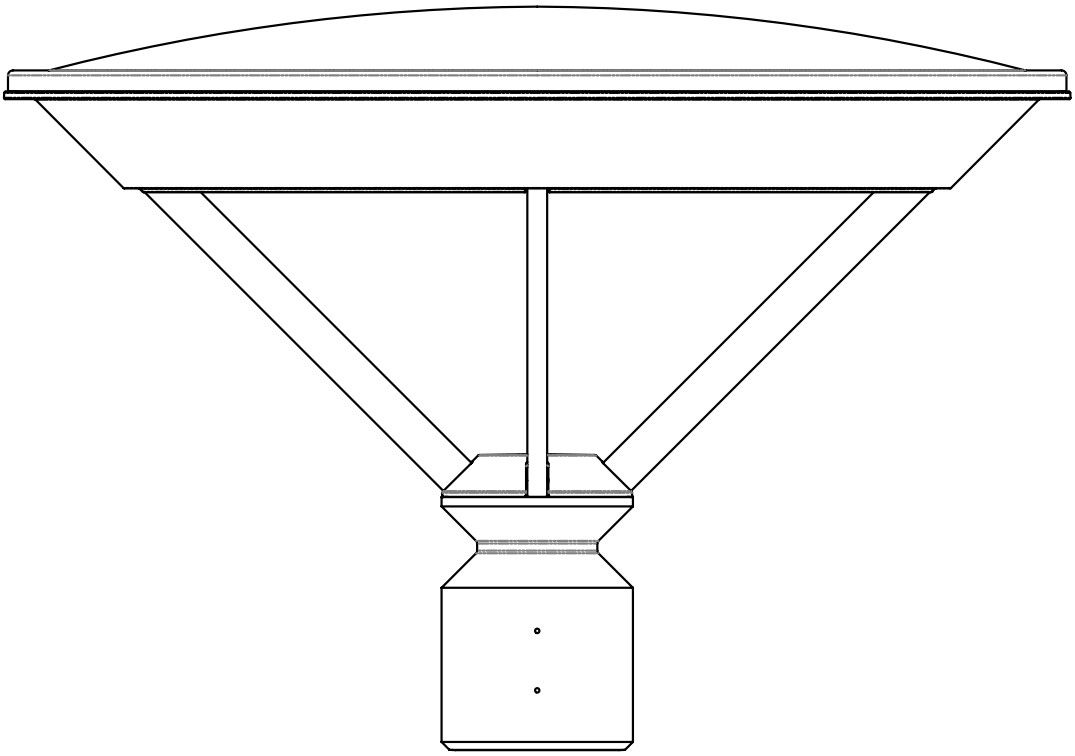

PREMIER II ARRAY 3K LUMEN DATA											
LUMENS	Current	LEDs	T1	T2	T3	T4	T4A	T5SR	T5LR	T5LS	Watts
10L	530	48AR	9349	9220	9114	9052	9425	9605	9052	9431	74
14L	530	64AR	12779	12602	12457	12373	12883	13129	12373	12891	101
18L	700	64AR	16304	16078	15892	15786	16436	16750	15786	16447	131
20L	530	96AR	18732	18473	18260	18137	18884	19245	18137	18896	147
22L	700	80AR	20102	19824	19595	19463	20265	20653	19463	20278	163
26L	700	96AR	23987	23655	23382	23225	24181	24644	23225	24197	198
PREMIER II ARRAY 4K LUMEN DATA											
10L	530	48AR	10350	10207	10089	10021	10434	10633	10021	10441	74
14L	530	64AR	14146	13951	13790	13697	14261	14534	13697	14270	101
18L	700	64AR	18048	17799	17593	17475	18195	18543	17475	18207	131
20L	530	96AR	20737	20450	20214	20078	20905	21305	20078	20919	147
22L	700	80AR	22253	21945	21692	21546	22434	22863	21546	22448	163
26L	700	96AR	26554	26186	25884	25710	26769	27281	25710	26786	198
PREMIER II ARRAY 5K LUMEN DATA											
10L	530	48AR	10350	10207	10089	10021	10434	10633	10021	10441	74
14L	530	64AR	14146	13951	13790	13697	14261	14534	13697	14270	101
18L	700	64AR	18048	17799	17593	17475	18195	18543	17475	18207	131
20L	530	96AR	20737	20450	20214	20078	20905	21305	20078	20919	147
22L	700	80AR	22253	21945	21692	21546	22434	22863	21546	22448	163
26L	700	96AR	26554	26186	25884	25710	26769	27281	25710	26786	198

PREMIER II ARRAY 3K LPW DATA											
LUMENS	Current	LEDs	T1	T2	T3	T4	T4A	T5SR	T5LR	T5LS	Watts
10L	530	48AR	126	124	123	122	127	130	122	127	74
14L	530	64AR	127	125	124	123	128	131	123	128	101
18L	700	64AR	124	122	121	120	125	127	120	125	131
20L	530	96AR	127	125	124	123	128	131	123	128	147
22L	700	80AR	123	122	120	119	124	127	119	124	163
26L	700	96AR	121	120	118	117	122	125	117	122	198
PREMIER II ARRAY 4K LPW DATA											
10L	530	48AR	140	138	136	135	141	144	135	141	74
14L	530	64AR	141	139	137	136	142	145	136	142	101
18L	700	64AR	137	135	134	133	138	141	133	139	131
20L	530	96AR	141	139	137	136	142	145	136	142	147
22L	700	80AR	137	135	133	132	138	140	132	138	163
26L	700	96AR	134	132	131	130	135	138	130	135	198
PREMIER II ARRAY 5K LPW DATA											
10L	530	48AR	140	138	136	135	141	144	135	141	74
14L	530	64AR	141	139	137	136	142	145	136	142	101
18L	700	64AR	137	135	134	133	138	141	133	139	131
20L	530	96AR	141	139	137	136	142	145	136	142	147
22L	700	80AR	137	135	133	132	138	140	132	138	163
26L	700	96AR	134	132	131	130	135	138	130	135	198

COMING SOON

19645 Rancho Way • Rancho Dominguez, CA 900220 • Phone: 310 512 6480 Fax 310 512 6486
www.visionairelighting.com

PRE-2-L LED Specifications

Project Name:

Catalog Number:

Type:

Contemporary design meets the new generation of LED green technology in this stunning lumenaire, the PRE-2-L. The Premier II series provides over fifty percent energy savings over traditional HID light sources; and offers excellent beam control and LED life beyond 100,000 hours for 350 milliamp systems. The PRE-2-L is offered in six optical distributions.

The PRE-2-L's fully-sealed housing features an exceptionally well-designed thermal management system that provides superior heat dissipation.

The PRE-2-L fixture is built with a cast aluminum housing, extruded aluminum arms and a spun aluminum, removable top.

The popular PRE-2-L is the perfect compliment to any university campus, business park, or walkway project where contemporary, architectural design is desired.

Ordering Information

MODEL	OPTICS	SOURCE	CURRENT	KELVIN	VOLTAGE	MOUNTING	FINISH	OPTIONS
PRE-2-L	**T1** **T2** **T3** **T4** **T5** **T5W**	**48LC** **64LC** **80LC** **96LC**	**3** 350mA **5** 530mA **7** 700mA	**3K** 3000K **4K** 4000K **5K** 5000K	**UNV** *120-277V **8** 347V **5** 480V	**PT** Post Top *Slips over 4" OD tenon X 4.5" tall as standard	**BZ** Bronze **BK** Black **SBK** Smooth Black **WH** White **SWH** Smooth White **GP** Graphite **GY** Grey **SL** Silver Metallic **CC** Custom Color	**PC-120** Button Type Photocell **PC-208** Button Type Photocell **PC-240** Button Type Photocell **PC-277** Button Type Photocell **WSC-8** Motion Sensor 8' Mounting Height **WSC-20** Motion Sensor 9-20' Mounting Height **WSC-40** Motion Sensor 21-40' Mounting Height This option will require (1) FSIR 100 remote for programing **DIM** 0-10v Dimming Driver **VWC** Visionaire Wireless Controls *Consult Factory **IR-R** Illuminated Rings Red **IR-B** Illuminated Rings Blue **IR-G** Illuminated Rings Green

Features & Specifications

PRE-2-L

Housing
The PRE-2-L's housing is constructed from durable, corrosion-resistant, cast aluminum. The spun aluminum top cap is .080 gauge, and easily removable for service. Silicone gasketing is provided for complete weather and insect protection.

Thermal Management
· The PRE-2-L provides excellent overall thermal management by maximizing the efficiency of the heat sink in the fixture. This enables the Premier II to withstand higher ambient temperatures and higher drive currents without degrading LED life.

Optical System
The hightest lumen output LEDs are utilized. High-performance acrylic optics feature industry leading Type I, II, III, IV, V and VW optical distributions. Acrylic optics are impact-resistant and rated to 94 percent translucence.
L70 life of our LEDs is rated over 100,000 hours (for 350 mA), The optical system qualifies as IES full cutoff to restrict light trespass, glare and light pollution for neighborhood-friendly lighting.
CRI values are 70.

Quali-Guard® Finish
Fixture components are chemically pretreated through a multiple-stage washer, and finished with an electrostatically-applied, thermoset polyester powder coat textured paint with a 3 to 5 mils thickness. Finish is oven-baked at 400 ºF for maximum adherence and finish hardness.
Available in standard and custom colors.
Finish is guaranteed for five (5) years.

Post Top Mount
· The PRE-2-L's contractor-friendly mounting hardware slips over 3" or 4" O.D. x 4" tall tenon utilizing stainless steel hardware.
· Round Internal Tenon Adaptors (RITA) are recommended for a smooth-looking connection. Standard for 4" poles, custom size required for 3" or 5" poles.

Electrical Assembly
· The PRE-2-L is supplied with a high-performance driver available in 350, 530 or 700mA. The driver is integrally-located in the housing, and is operational from 120 V through 480 V, 50 Hz to 60 Hz input. Power factor is 90%. · Rated for -40o to 50°C operation.
· 10 kV surge protector supplied as standard.

Warranty
· Five (5) year Limited Warranty on entire system, including finish. For full warranty information, please visit www.visionairelighting.com.

Options
· Button type photocell
· 0-10v Dimming Driver
· WattStopper FSP-211
· Motion Sensor
· Wireless Control
· Illuminated Ring
Please consult factory for detailed custom options.

Listings
· PRE-2-L is cUL listed
· DLC Listed
· IDA Certification
· IP65 Rated
· LM79 and LM80
· Powder Coated ToughTM

DesignLights Consortium (DLC) qualified Product. Some configurations of this product family may not be DesignLights Consortium (DLC) listed, please refer to the DLC qualified products list to confirm listed configurations. http://www.designlights.org/
3000K must be selected for IDA certification.

19645 Rancho Way · Rancho Dominguez, CA 900220 · Phone: 310 512 6480 Fax 310 512 6486
www.visionairelighting.com

PRE-2-L LED Specifications

Photometric Optical Summary

Not all optics are available on all fixtures. Check ordering chart for availability

Type I (T1)	Type II (T2)	Type III (T3)	Type IV (T4)	Type V (T5)	Type VW (T5)

EPA Data

1.2

Dimensions

Width:	PRE-2-L 27”
Height:	PRE-2-L 19”
Weight:	56 LBS

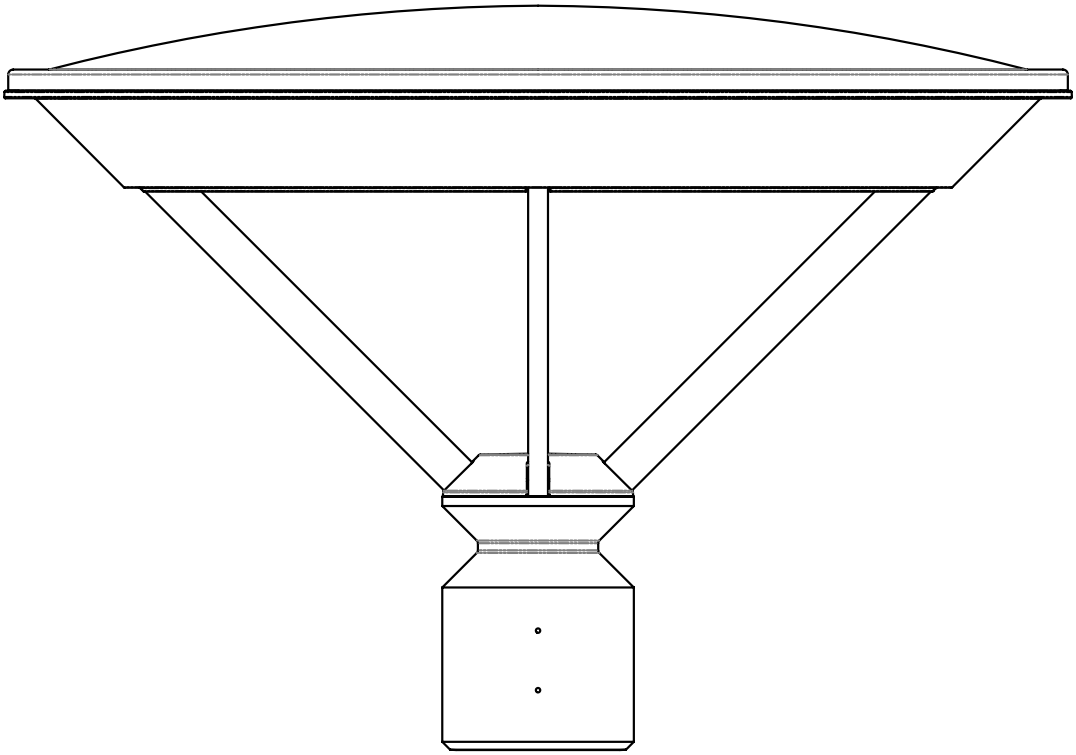

PRE-2-L 3K Lumen Data * Lumen chart updated 11.10.17																															
# LEDs	mA	Type 1	B	U	G	LPW	Type 2	B	U	G	LPW	Type 3	B	U	G	LPW	Type 4	B	U	G	LPW	Type 5	B	U	G	LPW	Type 5W	B	U	G	LPW	Watts
32	350	4531	2	0	2	129	4171	1	0	2	119	4135	1	0	1	118	4064	1	0	1	116	4469	2	0	1	128	4265	3	0	1	122	35
	530	6610	3	0	3	118	6085	2	0	2	109	6032	1	0	2	108	5929	1	0	2	106	6519	3	0	1	116	6222	3	0	1	111	56
	700	8423	3	0	3	115	7753	2	0	2	106	7687	1	0	2	105	7555	1	0	2	103	8307	3	0	1	114	7928	3	0	2	109	73
48	350	6916	3	0	3	126	6366	2	0	2	116	6311	1	0	2	115	6203	1	0	2	113	6821	3	0	1	124	6509	3	0	1	118	55
	530	9810	3	0	3	123	9030	2	0	3	113	8952	2	0	2	112	8799	2	0	2	110	9675	3	0	2	121	9233	3	0	2	115	80
	700	12431	3	0	3	117	11443	3	0	3	108	11344	2	0	2	107	11150	2	0	2	105	12260	3	0	2	116	11700	4	0	2	110	106
64	350	9000	3	0	3	127	8284	2	0	3	117	8213	2	0	2	116	8072	1	0	2	114	8876	3	0	1	125	8470	3	0	2	119	71
	530	12766	3	0	3	123	11750	3	0	3	113	11650	2	0	2	112	11450	2	0	2	110	12590	3	0	2	121	12015	4	0	2	116	104
	700	16122	4	0	4	116	14839	3	0	3	107	14712	2	0	2	106	14460	2	0	3	104	15900	4	0	2	114	15173	4	0	2	109	139
80	350	11149	3	0	3	133	10262	2	0	3	122	10174	2	0	2	121	10000	2	0	2	119	10996	3	0	2	131	10493	4	0	2	125	84
	530	15876	4	0	4	124	14614	3	0	3	114	14488	2	0	2	113	14240	2	0	3	111	15658	4	0	2	122	14943	4	0	2	117	128
	700	19801	4	0	4	113	18226	3	0	3	104	18069	3	0	3	103	17760	3	0	3	101	19528	4	0	2	111	18636	4	0	2	106	176
96	350	13212	3	0	3	131	12161	3	0	3	120	12057	2	0	2	119	11850	2	0	2	117	13030	3	0	2	129	12435	4	0	2	123	101
	530	18552	4	0	4	122	17077	3	0	3	112	16930	3	0	3	111	16640	2	0	3	109	18297	4	0	2	120	17461	4	0	2	115	152
	700	23380	4	0	4	112	21520	3	0	4	103	21335	3	0	3	102	20970	3	0	3	100	23058	4	0	2	110	22005	5	0	3	105	209
PRE-2-L 4K Lumen Data																															
32	350	4769	2	0	2	136	4390	1	0	2	125	4352	1	0	1	124	4278	1	0	1	122	4704	2	0	1	134	4489	3	0	1	128	35
	530	6958	3	0	3	124	6405	2	0	2	114	6350	1	0	2	113	6241	1	0	2	111	6862	3	0	1	123	6549	3	0	1	117	56
	700	8866	3	0	3	121	8161	2	0	2	112	8091	2	0	2	111	7953	1	0	2	109	8744	3	0	1	120	8345	3	0	2	114	73
48	350	7280	3	0	3	132	6701	2	0	2	122	6643	1	0	2	121	6529	1	0	2	119	7180	3	0	1	131	6852	3	0	1	125	55
	530	10326	3	0	3	129	9505	2	0	3	119	9424	2	0	2	118	9262	2	0	2	116	10184	3	0	2	127	9719	3	0	2	121	80
	700	13086	3	0	3	123	12045	3	0	3	114	11941	2	0	2	113	11737	2	0	2	111	12905	3	0	2	122	12316	4	0	2	116	106
64	350	9473	3	0	3	133	8720	2	0	3	123	8645	2	0	2	122	8497	2	0	2	120	9343	3	0	1	132	8916	3	0	2	126	71
	530	13438	3	0	3	129	12369	3	0	3	119	12263	2	0	2	118	12053	2	0	2	116	13253	3	0	2	127	12647	4	0	2	122	104
	700	16970	4	0	4	122	15620	3	0	3	112	15486	2	0	3	111	15221	2	0	3	110	16736	4	0	2	120	15972	4	0	2	115	139
80	350	11736	3	0	3	140	10803	3	0	3	129	10710	2	0	2	127	10526	2	0	2	125	11574	3	0	2	138	11046	4	0	2	131	84
	530	16712	4	0	4	131	15383	3	0	3	120	15251	2	0	2	119	14989	2	0	3	117	16482	4	0	2	129	15729	4	0	2	123	128
	700	20843	4	0	4	118	19185	3	0	4	109	19021	3	0	3	108	18695	3	0	3	106	20556	4	0	2	117	19617	4	0	2	111	176
96	350	13907	3	0	3	138	12801	3	0	3	127	12691	2	0	2	126	12474	2	0	2	124	13715	4	0	2	136	13089	4	0	2	130	101
	530	19529	4	0	4	128	17975	3	0	3	118	17821	3	0	3	117	17516	3	0	3	115	19260	4	0	2	127	18380	4	0	2	121	152
	700	24610	4	0	4	118	22653	3	0	4	108	22458	3	0	3	107	22074	3	0	4	106	24271	4	0	2	116	23163	5	0	3	111	209
PRE-2-L 5K Lumen Data																															
32	350	4577	2	0	2	131	4213	1	0	2	120	4177	1	0	1	119	4105	1	0	1	117	4514	2	0	1	129	4308	3	0	1	123	35
	530	6677	3	0	3	119	6146	2	0	2	110	6093	1	0	2	109	5989	1	0	2	107	6585	3	0	1	118	6284	3	0	1	112	56
	700	8508	3	0	3	117	7832	2	0	2	107	7764	1	0	2	106	7631	1	0	2	105	8391	3	0	1	115	8008	3	0	2	110	73
48	350	6986	3	0	3	127	6430	2	0	2	117	6375	1	0	2	116	6266	1	0	2	114	6889	3	0	1	125	6575	3	0	1	120	55
	530	9909	3	0	3	124	9121	2	0	3	114	9043	2	0	2	113	8888	2	0	2	111	9773	3	0	2	122	9326	3	0	2	117	80
	700	12557	3	0	3	118	11558	3	0	3	109	11459	2	0	2	108	11263	2	0	2	106	12384	3	0	2	117	11818	4	0	2	111	106
64	350	9090	3	0	3	128	8367	2	0	3	118	8296	2	0	2	117	8154	1	0	2	115	8965	3	0	1	126	8556	3	0	2	121	71
	530	12895	3	0	3	124	11869	3	0	3	114	11767	2	0	2	113	11566	2	0	2	111	12717	3	0	2	122	12136	4	0	2	117	104
	700	16284	4	0	4	117	14989	3	0	3	108	14861	2	0	2	107	14606	2	0	3	105	16060	4	0	2	116	15327	4	0	2	110	139
80	350	11262	3	0	3	134	10366	2	0	3	123	10277	2	0	2	122	10101	2	0	2	120	11107	3	0	2	132	10599	4	0	2	126	84
	530	16037	4	0	4	125	14761	3	0	3	115	14635	2	0	2	114	14384	2	0	3	112	15816	4	0	2	124	15094	4	0	2	118	128
	700	20001	4	0	4	114	18410	3	0	4	105	18252	3	0	3	104	17939	3	0	3	102	19725	4	0	2	112	18825	4	0	2	107	176
96	350	13345	3	0	3	132	12284	3	0	3	122	12178	2	0	2	121	11970	2	0	2	119	13161	3	0	2	130	12560	4	0	2	124	101
	530	18739	4	0	4	123	17249	3	0	3	113	17101	3	0	3	113	16808	3	0	3	111	18481	4	0	2	122	17637	4	0	2	116	152
	700	23616	4	0	4	113	21738	3	0	4	104	21551	3	0	3	103	21182	3	0	3	101	23291	4	0	2	111	22227	5	0	3	106	209
Visit www.visionairelighting.com for up-to-the-minute chart information.																															

PRE-2-L AM LED Specifications

Project Name:

Catalog Number:

Type:

Contemporary design meets the new generation of LED green technology in this stunning lumenaire, the Premier II Arm Mount Array. The Premier II Array series provides over fifty percent energy savings over traditional HID light sources; and offers excellent beam control and LED life beyond 100,000 hours for 350 milliamp systems. Premier II Arm Mount Array is offered in six optical distributions.

The Premier II's fully-sealed housing features an exceptionally well-designed thermal management system that provides superior heat dissipation.

The Premier II Arm Mount Array fixture is built with a cast aluminum housing, die cast aluminum arm and a spun aluminum, removable top.

The popular Premier II Arm Mount Array is the perfect compliment to any university campus, business park, or walkway project where contemporary, architectural design is desired.

Ordering Information

MODEL	OPTICS	LEDS	CURRENT	KELVIN	VOLTAGE	MOUNTING	FINISH	OPTIONS	OPTIONS
PRE-2-L	**T1** **T2** **T3** **T4** **T4A** **T5** **T5W**	**32LC** **48LC** **64LC** **80LC** **96LC**	**3** 350mA **5** 530mA **7** 700mA	**3K** 3000K **4K** 4000K **5K** 5000K	**UNV** *120-277V **8** 347V **5** 480V	**AM** Arm Mount **WM** Wall Mount *Cast Wall Plate (BAWP) to be ordered separately Round Pole Plate Adaptors (RPP) are to be ordered separately.	**BZ** Bronze **BK** Black **SBK** Smooth Black **WH** White **SWH** Smooth White **GP** Graphite **GY** Grey **SL** Silver Metallic **CC** Custom Color	**PCR-120** Photocell & Receptacle **PCR-208** Photocell & Receptacle **PCR-240** Photocell & Receptacle **PCR-277** Photocell & Receptacle **PCR-480** Photocell & Receptacle **PER** 3 Pin Photo Receptacle w/shorting cap **5PINPER** 5 Pin Photo Receptacle w/shorting cap Requires Dimming Driver **7PINPER** 7 Pin Photo Receptacle w/shorting cap Requires Dimming Driver **WSC-8** Motion Sensor 8' Mounting Height **WSC-20** Motion Sensor 9-20' Mounting Height **WSC-40** Motion Sensor 21-40' Mounting Height This option will require (1) FSIR 100 remote for programing **DIM** 0-10v Dimming Driver **VWC** Visionaire Wireless Controls *Consult Factory	**UPMA** Universal Pole Mount Adapter **RPP** Round Pole Plate Adaptor **ROT-R** Rotated Optics Right Side **ROT-L** Rotated Optics Left Side **CLS** Back Side Cutoff Louver Shield **SLDL** Serenity Lightly Diffused Lens **SHDL** Serenity Highly Diffused Lens

Features & Specifications

PREMIER II ARM MOUNT

Housing
The PRE-2-L's housing is constructed from durable, corrosion-resistant, cast aluminum.
The spun aluminum top cap is .080 gauge, and easily removable for service.
Silicone gasketing is provided for complete weather and insect protection.

Thermal Management
· The PRE-2-L provides excellent overall thermal management by maximizing the efficiency of the heat sink in the fixture. This enables the Premier II to withstand higher ambient temperatures and higher drive currents without degrading LED life.

Optical System
The hightest lumen output LEDs are utilized. High-performance acrylic optics feature industry leading Type I, II, III, IV, V and V-W optical distributions. Acrylic optics are impact-resistant and rated to 94 percent translucence.
L70 life of our LEDs is rated over 100,000 hours (for 350 mA), The optical system qualifies as IES full cutoff to restrict light trespass, glare and light pollution for neighborhood-friendly lighting.
CRI values are 70.

Quali-Guard® Finish
Fixture components are chemically pretreated through a multiple-stage washer, and finished with an electrostatically-applied, thermoset polyester powder coat textured paint with a 3 to 5 mils thickness. Finish is oven-baked at 400 ºF for maximum adherence and finish hardness.
Available in standard and custom colors.
Finish is guaranteed for five (5) years.

Mounting Arm/Driver Compartment
Durable two-piece die cast aluminum driver compartment utilizes a tool-less push button latch for ease of maintenance and sealed with a one-piece silicone gasket.

Electrical Assembly
· ThePRE-2-L is supplied with a high-performance driver available in 350, 530 and 700 mA. The driver is integrally-located in the housing, and is operational from 120 V through 480 V, 50 Hz to 60 Hz input. Power factor is 90%. · Rated for -40o to 50° C operation.
· 10 kV surge protector supplied as standard.

Warranty
· Five (5) year Limited Warranty on entire system, including finish. For full warranty information, please visit VisionaireLighting.com.

Options
· Photocell & Receptacle
· Photo Receptacle
· Round Pole Plate Adaptor
· 0-10v Dimming Driver
· WattStopper FSP-211
· Wireless Control
· Universal Pole Mount Adaptor
· Back Side Cutoff Louver Shield
· Right Side Cutoff Louver Shield
· Left Side Cutoff Louver Shield
· Emergency Battery Pack
· Lightly Diffused Lens

Please consult factory for detailed custom options.

Listings
· PRE-2-L is cUL listed
· DLC Listed
· IDA Certification
· IP65 Rated
· LM79 and LM80
· Powder Coated ToughTM

DesignLights Consortium (DLC) qualified Product. Some configurations of this product family may not be DesignLights Consortium (DLC) listed, please refer to the DLC qualified products list to confirm listed configurations. http://www.designlights.org/
3000K must be selected for IDA certification.

19645 Rancho Way · Rancho Dominguez, CA 900220 · Phone: 310 512 6480 Fax 310 512 6486
www.visionairelighting.com

PRE-2-L AM LED Specifications

Photometric Optical Summary

Not all optics are available on all fixtures. Check ordering chart for availability

Type I (T1)	Type II (T2)	Type III (T3)	Type IV (T4)	Type V (T5)	Type VW (T5W)

EPA Data

1.7

Dimensions

Width:	PRE-2-L-AM	27”
Height:	PRE-2-L-AM	12”
Depth:	PRE-2-L-AM	38”
Weight:	59 LBS	

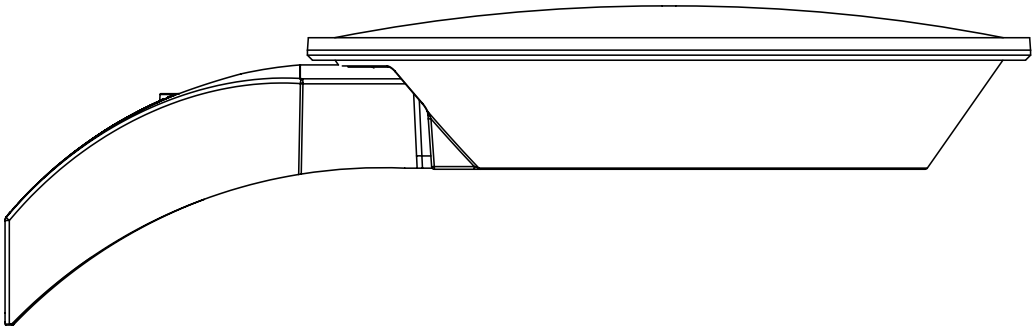

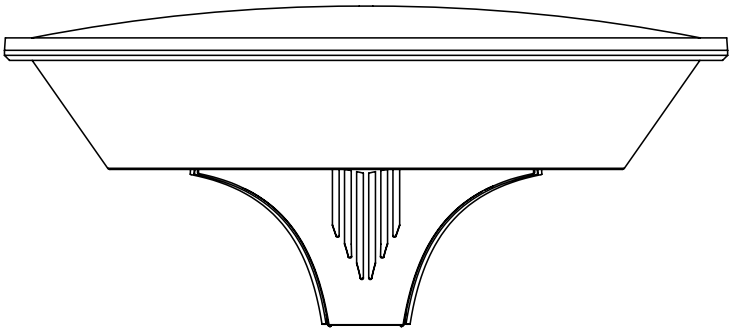

LED Specifications **PREMIER II ARM MOUNT**

PRE-2-L 3K Lumen Data *Lumen chart updated 11.10.17																														
# LEDs	mA	Type 1	B	U	G	LPW	Type 2	B	U	G	LPW	Type 3	B	U	G	LPW	Type 4	B	U	G	LPW	Type 5	B	U	G	LPW	Type 5W	B	U	G	LPW	Watts
32	350	4531	2	0	2	129	4171	1	0	2	119	4135	1	0	1	118	4064	1	0	1	116	4469	2	0	1	128	4265	3	0	1	122	35
	530	6610	3	0	3	118	6085	2	0	2	109	6032	1	0	2	108	5929	1	0	2	106	6519	3	0	1	116	6222	3	0	1	111	56
	700	8423	3	0	3	115	7753	2	0	2	106	7687	1	0	2	105	7555	1	0	2	103	8307	3	0	1	114	7928	3	0	2	109	73
48	350	6916	3	0	3	126	6366	2	0	2	116	6311	1	0	2	115	6203	1	0	2	113	6821	3	0	1	124	6509	3	0	1	118	55
	530	9810	3	0	3	123	9030	2	0	3	113	8952	2	0	2	112	8799	2	0	2	110	9675	3	0	2	121	9233	3	0	2	115	80
	700	12431	3	0	3	117	11443	3	0	3	108	11344	2	0	2	107	11150	2	0	2	105	12260	3	0	2	116	11700	4	0	2	110	106
64	350	9000	3	0	3	127	8284	2	0	3	117	8213	2	0	2	116	8072	1	0	2	114	8876	3	0	1	125	8470	3	0	2	119	71
	530	12766	3	0	3	123	11750	3	0	3	113	11650	2	0	2	112	11450	2	0	2	110	12590	3	0	2	121	12015	4	0	2	116	104
	700	16122	4	0	4	116	14839	3	0	3	107	14712	2	0	2	106	14460	2	0	3	104	15900	4	0	2	114	15173	4	0	2	109	139
80	350	11149	3	0	3	133	10262	2	0	3	122	10174	2	0	2	121	10000	2	0	2	119	10996	3	0	2	131	10493	4	0	2	125	84
	530	15876	4	0	4	124	14614	3	0	3	114	14488	2	0	2	113	14240	2	0	3	111	15658	4	0	2	122	14943	4	0	2	117	128
	700	19801	4	0	4	113	18226	3	0	3	104	18069	3	0	3	103	17760	3	0	3	101	19528	4	0	2	111	18636	4	0	2	106	176
96	350	13212	3	0	3	131	12161	3	0	3	120	12057	2	0	2	119	11850	2	0	2	117	13030	3	0	2	129	12435	4	0	2	123	101
	530	18552	4	0	4	122	17077	3	0	3	112	16930	3	0	3	111	16640	2	0	3	109	18297	4	0	2	120	17461	4	0	2	115	152
	700	23380	4	0	4	112	21520	3	0	4	103	21335	3	0	3	102	20970	3	0	3	100	23058	4	0	2	110	22005	5	0	3	105	209
PRE-2-L 4K Lumen Data																														
32	350	4769	2	0	2	136	4390	1	0	2	125	4352	1	0	1	124	4278	1	0	1	122	4704	2	0	1	134	4489	3	0	1	128	35
	530	6958	3	0	3	124	6405	2	0	2	114	6350	1	0	2	113	6241	1	0	2	111	6862	3	0	1	123	6549	3	0	1	117	56
	700	8866	3	0	3	121	8161	2	0	2	112	8091	2	0	2	111	7953	1	0	2	109	8744	3	0	1	120	8345	3	0	2	114	73
48	350	7280	3	0	3	132	6701	2	0	2	122	6643	1	0	2	121	6529	1	0	2	119	7180	3	0	1	131	6852	3	0	1	125	55
	530	10326	3	0	3	129	9505	2	0	3	119	9424	2	0	2	118	9262	2	0	2	116	10184	3	0	2	127	9719	3	0	2	121	80
	700	13086	3	0	3	123	12045	3	0	3	114	11941	2	0	2	113	11737	2	0	2	111	12905	3	0	2	122	12316	4	0	2	116	106
64	350	9473	3	0	3	133	8720	2	0	3	123	8645	2	0	2	122	8497	2	0	2	120	9343	3	0	1	132	8916	3	0	2	126	71
	530	13438	3	0	3	129	12369	3	0	3	119	12263	2	0	2	118	12053	2	0	2	116	13253	3	0	2	127	12647	4	0	2	122	104
	700	16970	4	0	4	122	15620	3	0	3	112	15486	2	0	3	111	15221	2	0	3	110	16736	4	0	2	120	15972	4	0	2	115	139
80	350	11736	3	0	3	140	10803	3	0	3	129	10710	2	0	2	127	10526	2	0	2	125	11574	3	0	2	138	11046	4	0	2	131	84
	530	16712	4	0	4	131	15383	3	0	3	120	15251	2	0	2	119	14989	2	0	3	117	16482	4	0	2	129	15729	4	0	2	123	128
	700	20843	4	0	4	118	19185	3	0	4	109	19021	3	0	3	108	18695	3	0	3	106	20556	4	0	2	117	19617	4	0	2	111	176
96	350	13907	3	0	3	138	12801	3	0	3	127	12691	2	0	2	126	12474	2	0	2	124	13715	4	0	2	136	13089	4	0	2	130	101
	530	19529	4	0	4	128	17975	3	0	3	118	17821	3	0	3	117	17516	3	0	3	115	19260	4	0	2	127	18380	4	0	2	121	152
	700	24610	4	0	4	118	22653	3	0	4	108	22458	3	0	3	107	22074	3	0	4	106	24271	4	0	2	116	23163	5	0	3	111	209
PRE-2-L 5K Lumen Data																														
32	350	4577	2	0	2	131	4213	1	0	2	120	4177	1	0	1	119	4105	1	0	1	117	4514	2	0	1	129	4308	3	0	1	123	35
	530	6677	3	0	3	119	6146	2	0	2	110	6093	1	0	2	109	5989	1	0	2	107	6585	3	0	1	118	6284	3	0	1	112	56
	700	8508	3	0	3	117	7832	2	0	2	107	7764	1	0	2	106	7631	1	0	2	105	8391	3	0	1	115	8008	3	0	2	110	73
48	350	6986	3	0	3	127	6430	2	0	2	117	6375	1	0	2	116	6266	1	0	2	114	6889	3	0	1	125	6575	3	0	1	120	55
	530	9909	3	0	3	124	9121	2	0	3	114	9043	2	0	2	113	8888	2	0	2	111	9773	3	0	2	122	9326	3	0	2	117	80
	700	12557	3	0	3	118	11558	3	0	3	109	11459	2	0	2	108	11263	2	0	2	106	12384	3	0	2	117	11818	4	0	2	111	106
64	350	9090	3	0	3	128	8367	2	0	3	118	8296	2	0	2	117	8154	1	0	2	115	8965	3	0	1	126	8556	3	0	2	121	71
	530	12895	3	0	3	124	11869	3	0	3	114	11767	2	0	2	113	11566	2	0	2	111	12717	3	0	2	122	12136	4	0	2	117	104
	700	16284	4	0	4	117	14989	3	0	3	108	14861	2	0	2	107	14606	2	0	3	105	16060	4	0	2	116	15327	4	0	2	110	139
80	350	11262	3	0	3	134	10366	2	0	3	123	10277	2	0	2	122	10101	2	0	2	120	11107	3	0	2	132	10599	4	0	2	126	84
	530	16037	4	0	4	125	14761	3	0	3	115	14635	2	0	2	114	14384	2	0	3	112	15816	4	0	2	124	15094	4	0	2	118	128
	700	20001	4	0	4	114	18410	3	0	4	105	18252	3	0	3	104	17939	3	0	3	102	19725	4	0	2	112	18825	4	0	2	107	176
96	350	13345	3	0	3	132	12284	3	0	3	122	12178	2	0	2	121	11970	2	0	2	119	13161	3	0	2	130	12560	4	0	2	124	101
	530	18739	4	0	4	123	17249	3	0	3	113	17101	3	0	3	113	16808	3	0	3	111	18481	4	0	2	122	17637	4	0	2	116	152
	700	23616	4	0	4	113	21738	3	0	4	104	21551	3	0	3	103	21182	3	0	3	101	23291	4	0	2	111	22227	5	0	3	106	209

Visit www.VisionaireLighting.com for up-to-the-minute chart information.
For 3K lumen Data Multiply 4K by .95

19645 Rancho Way • Rancho Dominguez, CA 900220 • Phone: 310 512 6480 Fax 310 512 6486
www.visionairelighting.com

PRE-2-M LED Specifications

Project Name:

Catalog Number:

Type:

Contemporary design meets the new generation of LED green technology in this stunning lumenaire, the PRE-2-M. The PRE-2-M series provides up to fifty percent energy savings over traditional HID light sources; and offers excellent beam control and LED life beyond 100,000 hours for 350 milliamp systems. The PRE-2-M is offered in six optical distributions.

The PRE-2-M's fully-sealed housing features an exceptionally well-designed thermal management system that provides superior heat dissipation.

The PRE-2-M fixture is built with a cast aluminum housing, extruded aluminum arms and a spun aluminum, removable top.

The popular PRE-2-M is the perfect compliment to any university campus, business park, or walkway project where contemporary, architectural design is desired.

Ordering Information

MODEL	OPTICS	SOURCE	CURRENT	KELVIN	VOLTAGE	MOUNTING	FINISH	OPTIONS
PRE-2-M	**T1** **T2** **T3** **T4** **T5** **T5W**	**16LC** **32LC** **48LC**	**3** 350mA **5** 530mA **7** 700mA	**3K** 3000K **4K** 4000K **5K** 5000K	**UNV** *120-277V **8** 347V **5** 480V	**PT** Post Top *Slips over 3" OD tenon X 4.5" tall as standard	**BZ** Bronze **BK** Black **SBK** Smooth Black **WH** White **SWH** Smooth White **GP** Graphite **GY** Grey **SL** Silver Metallic **CC** Custom Color	**PC-120** Button Type Photocell **PC-208** Button Type Photocell **PC-240** Button Type Photocell **PC-277** Button Type Photocell **WSC-8** Motion Sensor 8' Mounting Height **WSC-20** Motion Sensor 9-20' Mounting Height **WSC-40** Motion Sensor 21-40' Mounting Height This option will require (1) FSIR 100 remote for programing **DIM** 0-10v Dimming Driver **VWC** Visionaire Wireless Controls *Consult Factory **IR-R** Illuminated Rings Red **IR-B** Illuminated Rings Blue **IR-G** Illuminated Rings Green **PER** 3 Pin Photo Receptacle w/shorting cap **5PINPER** 5 Pin Photo Receptacle w/shorting cap Requires Dimming Driver **7PINPER** 7 Pin Photo Receptacle w/shorting cap Requires Dimming Driver

Features & Specifications

PRE-2-M

Housing
The PRE-2-M's housing is constructed from durable, corrosion-resistant, cast aluminum. The spun aluminum top cap is .080 gauge, and easily removable for service. Silicone gasketing is provided for complete weather and insect protection.

Thermal Management
· The PRE-2-M provides excellent overall thermal management by maximizing the efficiency of the heat sink in the fixture. This enables the PRE-2-M to withstand higher ambient temperatures and higher drive currents without degrading LED life.

Optical System
The hightest lumen output LEDs are utilized. High-performance acrylic optics feature industry leading Type I, II, III, IV, V and VW optical distributions. Acrylic optics are impact-resistant and rated to 94 percent translucence.
L70 life of our LEDs is rated over 100,000 hours (for 350 mA), The optical system qualifies as IES full cutoff to restrict light trespass, glare and light pollution for neighborhood-friendly lighting.
CRI values are 70.

Quali-Guard® Finish
Fixture components are chemically pretreated through a multiple-stage washer, and finished with an electrostatically-applied, thermoset polyester powder coat textured paint with a 3 to 5 mils thickness. Finish is oven-baked at 400 ºF for maximum adherence and finish hardness.
Available in standard and custom colors.
Finish is guaranteed for five (5) years.

Post Top Mount
· The PRE-2-M contractor-friendly mounting hardware slips over 3" OD tenon X 4.5" tall as standard utilizing stainless steel hardware.

Electrical Assembly
· The PRE-2-M is supplied with a high-performance driver available in 350, 530 or 700. The driver is integrally-located in the housing, and is operational from 120 V through 480 V, 50 Hz to 60 Hz input. Power factor is 90%. · Rated for -40o to 50° C operation.
· 10 kV surge protector supplied as standard.

Warranty
· Five (5) year Limited Warranty on entire system, including finish. For full warranty information, please visit www.visionairelighting.com.

Options
· Button type photocell
· 0-10v Dimming Driver
· WattStopper FSP-211
· Motion Sensor
· Wireless Control
· Illuminated Rings
· Photo Receptacle
Please consult factory for detailed custom options.

Listings
· PRE-2-M is cUL listed
· DLC Listed
· IDA Certification
· IP65 Rated
· LM79 and LM80
· Powder Coated ToughTM

DesignLights Consortium (DLC) qualified Product. Some configurations of this product family may not be DesignLights Consortium (DLC) listed, please refer to the DLC qualified products list to confirm listed configurations. http://www.designlights.org/
3000K must be selected for IDA certification.

19645 Rancho Way · Rancho Dominguez, CA 900220 · Phone: 310 512 6480 Fax 310 512 6486
www.visionairelighting.com

PRE-2-M LED Specifications

Photometric Optical Summary

Not all optics are available on all fixtures. Check ordering chart for availability

Type I (T1)	Type II (T2)	Type III (T3)	Type IV (T4)	Type V (T5)	Type VW (T5W)

EPA Data

.88

Dimensions

Width:	PRE-2-M 18”
Height:	PRE-2-M 14”
Weight:	37 LBS

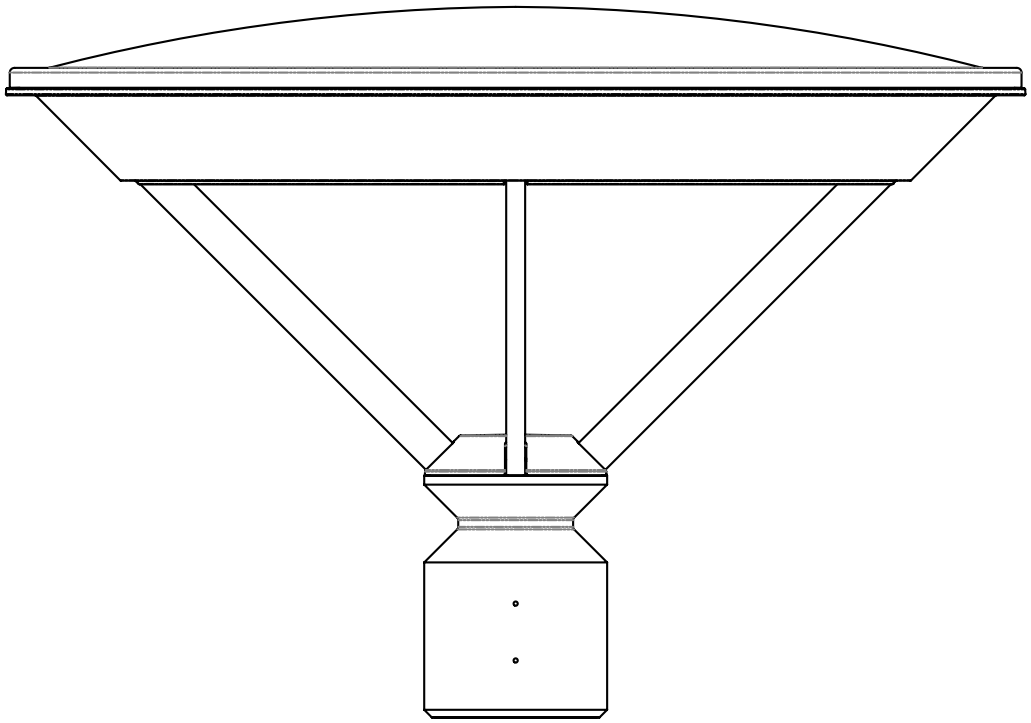

PRE-2-M 3K Lumen Data •Lumen chart updated 11.14.17																														
# LEDs	mA	Type 1	B	U	G	LPW	Type 2	B	U	G	LPW	Type 3	B	U	G	LPW	Type 4	B	U	G	LPW	Type 5	B	U	G	LPW	Type 5W	B	U	G	LPW	Watts
16	350	2320	1	0	1	129	2136	1	0	1	119	2117	1	0	1	118	2081	1	0	1	116	2288	1	0	1	127	2184	2	0	1	121	18
	530	3181	2	0	2	122	2928	1	0	1	113	2903	1	0	1	112	2853	1	0	1	110	3137	2	0	1	121	2994	2	0	1	115	26
	700	4417	2	0	2	113	4066	1	0	2	104	4031	1	0	1	103	3962	1	0	1	102	4356	2	0	1	112	4157	2	0	1	107	39
32	350	4531	2	0	2	129	4171	1	0	2	119	4135	1	0	1	118	4064	1	0	1	116	4469	2	0	1	128	4265	3	0	1	122	35
	530	6610	3	0	3	118	6085	2	0	2	109	6032	1	0	2	108	5929	1	0	2	106	6519	3	0	1	116	6222	3	0	1	111	56
	700	8423	3	0	3	115	7753	2	0	2	106	7687	1	0	2	105	7555	1	0	2	103	8307	3	0	1	114	7928	3	0	2	109	73
48	350	6916	3	0	3	126	6366	2	0	2	116	6311	1	0	2	115	6203	1	0	2	113	6821	3	0	1	124	6509	3	0	1	118	55
	530	9810	3	0	3	123	9030	2	0	3	113	8952	2	0	2	112	8799	2	0	2	110	9675	3	0	2	121	9233	3	0	2	115	80
	700	12431	3	0	3	117	11443	3	0	3	108	11344	2	0	2	107	11150	2	0	2	105	12260	3	0	2	116	11700	4	0	2	110	106
PRE-2-M 4K Lumen Data																															
16	350	2442	1	0	1	136	2248	1	0	1	125	2229	1	0	1	124	2191	1	0	1	122	2409	1	0	1	134	2299	2	0	1	128	18
	530	3348	2	0	2	129	3082	1	0	1	119	3055	1	0	1	118	3003	1	0	1	116	3302	2	0	1	127	3151	2	0	1	121	26
	700	4650	2	0	2	119	4280	1	0	2	110	4243	1	0	1	109	4171	1	0	1	107	4586	2	0	1	118	4376	3	0	1	112	39
32	350	4769	2	0	2	136	4390	1	0	2	125	4352	1	0	1	124	4278	1	0	1	122	4704	2	0	1	134	4489	3	0	1	128	35
	530	6958	3	0	3	124	6405	2	0	2	114	6350	1	0	2	113	6241	1	0	2	111	6862	3	0	1	123	6549	3	0	1	117	56
	700	8866	3	0	3	121	8161	2	0	2	112	8091	2	0	2	111	7953	1	0	2	109	8744	3	0	1	120	8345	3	0	2	114	73
48	350	7280	3	0	3	132	6701	2	0	2	122	6643	1	0	2	121	6529	1	0	2	119	7180	3	0	1	131	6852	3	0	1	125	55
	530	10326	3	0	3	129	9505	2	0	3	119	9424	2	0	2	118	9262	2	0	2	116	10184	3	0	2	127	9719	3	0	2	121	80
	700	13086	3	0	3	123	12045	3	0	3	114	11941	2	0	2	113	11737	2	0	2	111	12905	3	0	2	122	12316	4	0	2	116	106
PRE-2-M 5K Lumen Data																															
16	350	2344	1	0	1	130	2157	1	0	1	120	2139	1	0	1	119	2102	1	0	1	117	2311	1	0	1	128	2206	2	0	1	123	18
	530	3213	2	0	2	124	2957	1	0	1	114	2932	1	0	1	113	2979	1	0	1	115	3169	2	0	1	122	3024	2	0	1	116	26
	700	4462	2	0	2	114	4107	1	0	2	105	4072	1	0	1	104	4002	1	0	1	103	4400	2	0	1	113	4199	3	0	1	108	39
32	350	4577	2	0	2	131	4213	1	0	2	120	4177	1	0	1	119	4105	1	0	1	117	4514	2	0	1	129	4308	3	0	1	123	35
	530	6677	3	0	3	119	6146	2	0	2	110	6093	1	0	2	109	5989	1	0	2	107	6585	3	0	1	118	6284	3	0	1	112	56
	700	8508	3	0	3	117	7832	2	0	2	107	7764	1	0	2	106	7631	1	0	2	105	8391	3	0	1	115	8008	3	0	2	110	73
48	350	6986	3	0	3	127	6430	2	0	2	117	6375	1	0	2	116	6266	1	0	2	114	6889	3	0	1	125	6575	3	0	1	120	55
	530	9909	3	0	3	124	9121	2	0	3	114	9043	2	0	2	113	8888	2	0	2	111	9773	3	0	2	122	9326	3	0	2	117	80
	700	12557	3	0	3	118	11558	3	0	3	109	11459	2	0	2	108	11263	2	0	2	106	12384	3	0	2	117	11818	4	0	2	111	106
Visit www.VisionaireLighting.com for up-to-the-minute chart information.																															

Premier Bollard LED Specifications

Project Name:

Catalog Number:

Type:

The new Premier Bollard LED Series continues the unique contemporary design inspired by the sleek styling of the Premier II family. Separating the Driver(s) from the individual die-cast aluminum LED engines: optimize the life of the LEDs and the Driver(s); and maximizes the lumen output of the fixture.
The LED light assemblies come in 20 LEDs.

Six optical distribution patterns are available. Choose between 3000, 4000 or 5000 Kelvin temperature of the LED's.

A durable polyester powdercoat finish is guaranteed for five years; and is available in standard or custom colors.

The Premier Bollard LED series is an exceptional choice for low level lighting applications.

Ordering Information

MODEL	HEIGHT	OPTICS	SOURCE	CURRENT	KELVIN	VOLTAGE	MOUNTING	FINISH	OPTIONS
PRB-1	**S36** Straight 36" **S41** Straight 41" **T41** Tapered 41"	**T1** **T2** **T3** **T4** **T5** **T5W**	**20LC**	**1** 175mA **3** 350mA **5** 530mA **7** 700mA	**3K** 3000K **4K** 4000K **5K** 5000K	**UNV** *120-277V	**AB** Anchor Base (ANCHOR BOLT KIT SUPPLIED)	**BZ** Bronze **BK** Black **SBK** Smooth Black **WH** White **SWH** Smooth White **GP** Graphite **GY** Grey **SL** Silver Metallic **CC** Custom Color	**PC-120** Button Type Photocell **PC-208** Button Type Photocell **PC-240** Button Type Photocell **PC-277** Button Type Photocell **DIM** 0-10v Dimming Driver **VRB** Vandal-Resistant Base **IR-R** Illuminated Ring Red **IR-B** Illuminated Ring Blue **IR-G** Illuminated Ring Green **IR-GL** Illuminated Ring Gold **IR-W** Illuminated Ring White

Housing
The LED light engines are constructed of heavy-duty, die-cast aluminum. The extruded pole contains the driver(s), allowing for cooler operation and longer life. Silicone gasketing is utilized throughout the fixture for weather tight operation.

Thermal Management
The Premier Bollard Series provides excellent overall thermal management by maximizing the fixture's heat sink capabilities. This enables the Premier Bollard Series to withstand higher ambient temperatures and drive currents without degrading LED life. The Premier Bollard Series has a very low thermal resistance rating.
The L70 test determines the point in an LEDs life when it reaches 70 percent of its initial output. The Premier Bollard Series LEDs have been determined to last a minimum of 100,000+ hours in 25° C environments when driven at 175 mA.

Optical System
The highest lumen output LEDs are utilized in the Premier Bollard Series. IES distribution Types I, II, III, IV and V are available. LED light assemblies come in 20 LEDs. The optical system qualifies as IES full cutoff to restrict light trespass, glare and light pollution.
- CRI values are 70.
- Fixture comes standard with a polycarbonate lens.

Quali-Guard® Finish
The finish is a Quali-Guard® textured, chemically pretreated through a multiple-stage washer, electrostatically applied, thermoset polyester powder coat finish, with a minimum of 3-5 mil thickness. Finish is oven-baked at 400º F to promote maximum adherence and finish hardness. All finishes are available in standard and custom colors. Finish is guaranteed for five (5) years.

Mounting
The Premier Bollard Luminaire is easily mounted with anchor bolt kit.

Electrical Assembly
The Premier Bollard Series is supplied with a choice of 175, 350, 530 or 700 mA high-performance LED drivers that accept 120v 50 Hz to 60 Hz, input.
-40° to 50° C operating temperature.
- 10 kV surge protector supplied as standard.

Warranty
Five (5) year Limited Warranty on entire system, including finish. For full warranty information, please visit VisionaireLighting.com.

Options
- 0-10v Dimming Driver
- Button Type Photocell
- Vandal Resistant Base
- Illuminated Ring

Listings
- The Premier Bollard is cUL Listed, suitable for wet locations.
- IP-65 Rated
- Powder Coated Tough.
- DLC Listed
- IDA Certification

DesignLights Consortium (DLC) qualified Product. Some configurations of this product family may not be DesignLights Consortium (DLC) listed, please refer to the DLC qualified products list to confirm listed configurations. http://www.designlights.org/
3000K must be selected for IDA certification.

19645 Rancho Way · Rancho Dominguez, CA 900220 · Phone: 310 512 6480 Fax 310 512 6486
www.visionairelighting.com

PRB LED Specifications

Photometric Optical Summary

Not all optics are available on all fixtures. Check ordering chart for availability

Type I (T1)	Type II (T2)	Type III (T3)	Type IV (T4)	Type V (T5)	Type V-W (T5W)

Dimensions

Width:	PRB-1 12”
Height:	PRB-1 41”

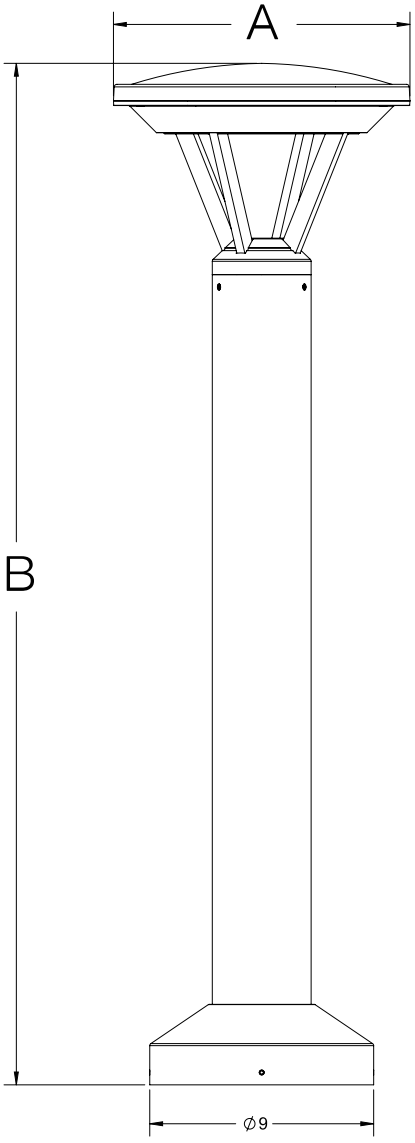

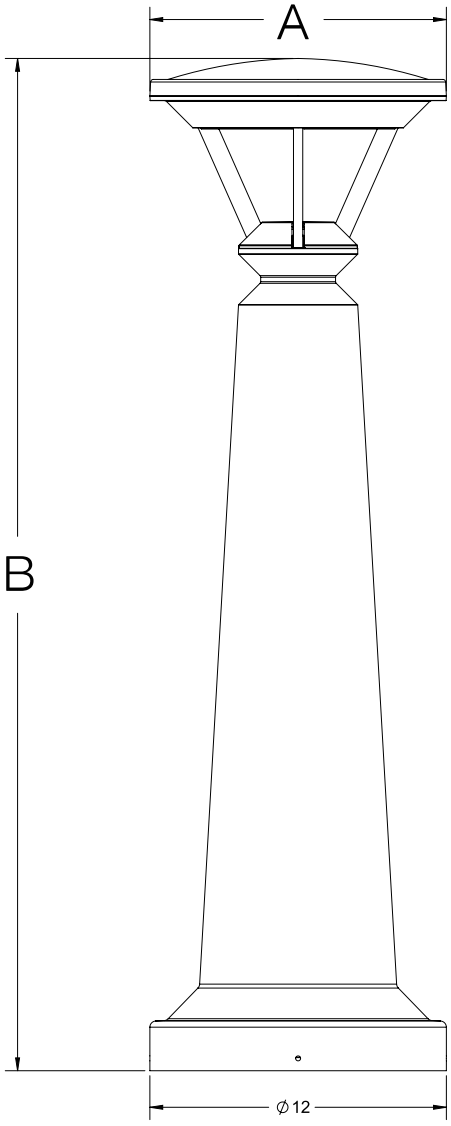

3K Lumen Data *Lumen Data Updated 11.21.17														
# LEDs	mA	Type 1	LPW	Type 2	LPW	Type 3	LPW	Type 4	LPW	Type 5	LPW	Type 5W	LPW	Watts
20	175	1425	110	1321	102	1361	105	1274	98	1429	110	1347	104	13
	350	2463	112	2283	104	2352	107	2202	100	2470	112	2327	106	22
	530	3849	113	3568	105	3675	108	3441	101	3860	114	3637	107	34
	700	4763	106	4415	98	4548	101	4258	95	4777	106	4500	100	45
4K Lumen Data														
20	175	1500	115	1391	107	1432	110	1341	103	1504	116	1417	109	13
	350	2593	118	2404	109	2476	113	2318	105	2600	118	2450	111	22
	530	4052	119	3756	110	3869	114	3622	107	4063	120	3828	113	34
	700	5014	111	4648	103	4787	106	4482	100	5028	112	4737	105	45
5K Lumen Data														
20	175	1439	111	1334	103	1374	106	1287	99	1444	111	1360	105	13
	350	2488	113	2307	105	2376	108	2224	101	2495	113	2351	107	22
	530	3888	114	3604	106	3712	109	3460	102	3899	115	3674	108	34
	700	4811	107	4460	99	4594	102	4301	96	4825	107	4546	101	45
Visit www.VisionaireLighting.com for up-to-the-minute chart information.														

Vandal Resistant Base Detail

PREMIER BOLLARD BASE TEMPLATE

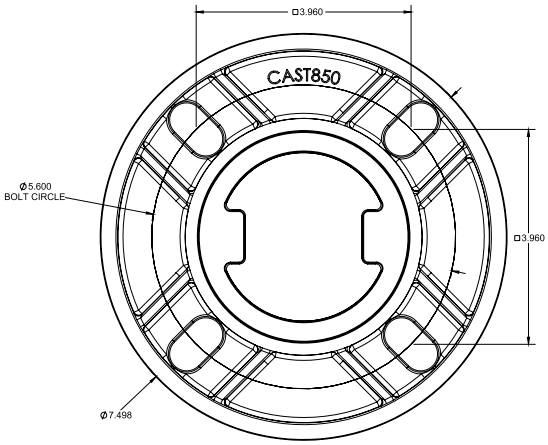

PREMIER BOLLARD TAPERED BASE TEMPLATE

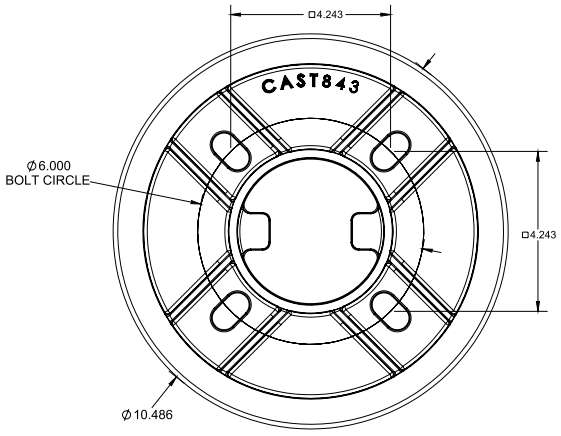

19645 Rancho Way · Rancho Dominguez, CA 900220 · Phone: 310 512 6480 Fax 310 512 6486
www.visionairelighting.com

VISIONAIRE LIGHTING

19645 Rancho Way,
Rancho Dominguez, CA 90220
310.512.6480
www.visionairelighting.com